EEC-202 Electrical and Electronic Measurements Laboratory
Experiment Manual
Department of Electrical Engineering, IIT Roorkee
Experiment No. 05

Objective: To perform the following tests on a given single-phase electronic energy meter using a substandard energy meter:

(i) Short-period dial test (ii) Test for meter constant (iii) Starting current test.

Apparatus Used:

1. Electronic energy meter - 01
2. Standard watthour meter (GE Type IB-10) - 01
3. Voltmeter (0 – 300 V) - 01
4. Ammeter (0 – 5 A) – 01
5. Ammeter (0 – 50 mA) - 01
6. Rheostat (0 – 50 Ω) – 01, Rheostat (0 – 2 kΩ) - 01
7. Single phase autotransformer (0 – 230 V) - 02
8. Single-Pole-Single-Throw (SPST) switch - 01

Theory:

The analog energy meter employs an aluminum disc that rotates because of the net torque resulting from the currents in the pressure coil and the current coil. The energy consumption is measured by counting the number of rotations of the disk over a known period of time. Apart from the manual process of recording the readings, the analog meters have certain limitations. These meters typically do not have facility to easily integrate in smart grid. Further, they do not provide real-time information on the consumption of energy.

On the other hand, the electronic meters measure energy using highly integrated components or other customized integrated circuits. These devices digitize the instantaneous voltage and current via a high-resolution sigma-delta ADC. Computing the product of the voltage and current gives the instantaneous power in watts. Integration over time gives energy used, which is usually measured in kilowatt-hours (kWh). After every predefined value of energy, electronic energy meters generate a pulse. This pulse can be used to calibrate the given energy meter.

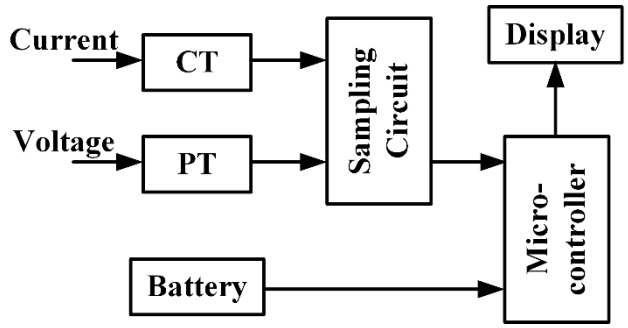

Fig. 1. Block diagram of an electronic watthour meter.

Electronic watthour meters (or simply, energy meters) are generally available at 1600, 3200, or 6400 pulses per kWh ratings. These ratings are known as meter constants. A basic block diagram of the electronic watthour meter is shown in Fig. 1.

i) Short-period dial test:

The circuit diagram for the short-period test is given in Fig. 2. A standard watthour meter is used in conjunction with the test electronic watthour meter. The pressure coils (PCs) of both meters are connected in parallel and excited to the rated voltage using a 1-Φ auto-transformer. Similarly, the current coils (CCs) of both meters are connected in series and excited using a separate single-phase autotransformer. This connection is done so that both meters measure the same amount of energy. Using the reading of the standard energy meter, the test electronic energy meter is calibrated, and the percentage error is observed.

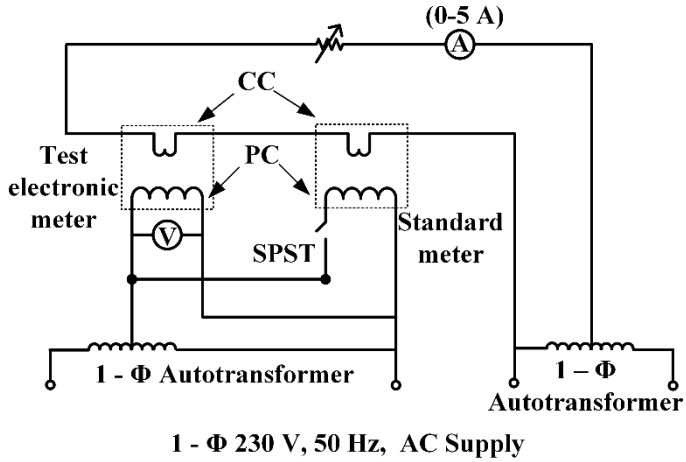

Fig. 2. Circuit diagram for short-period dial test and meter constant test.

ii) Test for meter constant:

Similar to the short-period dial test, same energy is made to be consumed by both the watthour meters, and using the standard meter's reading, meter constant of the test electric meter is found.

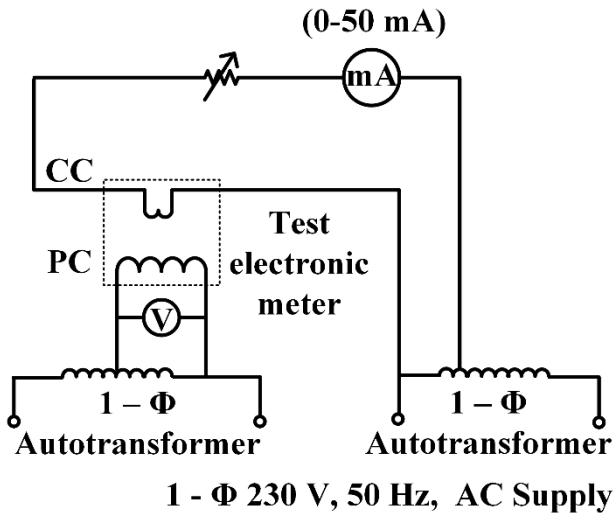

Fig. 3. Circuit diagram for starting current test.

iii) Starting current test

The circuit diagram for the starting current test is provided in Fig. 3. Electronic energy meter should start working at a current as low as 0.75 % of the rated current. The test meter's PC is excited to the rated voltage using an autotransformer, and the CC of the test meter is excited with 0.75 % of the rated current. As the rated current of the current energy meter is 5 A, a current of 37.5 mA (= 0.75 % of 5 A) is passed through the CC. The energy meter should generate a pulse for every ten minutes of the time interval.

Observations and Results:

Sr. No.	Voltage (V)	Current (A)	Time (s)	Substandard Meter			Electronic Meter			Error (in %)
				Revo.	MC	Energy	Pulses	MC	Energy	
1										
2										
3										
4										
5										

Discussion:

1. What is the meter constant, and how is it used to calculate energy consumption?

2. What are the different types of switches? What do you mean by pole and throw?

3. What are the advantages of an electronic energy meter compared to a traditional energy meter?